BATHTUB
INSTALLATION INSTRUCTION

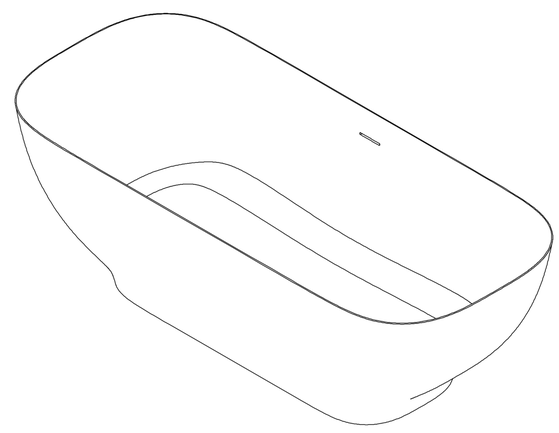

NOTE: Due to the nature of the material,models can differ up to 20mm from the listed dimensions.

PACKING LIST
- Bathtub
- Drain Pipe

NOMINAL DIMENSIONS

MODEL#	BATHTUB SIZE
22S04-67	67"*30"*21.7"

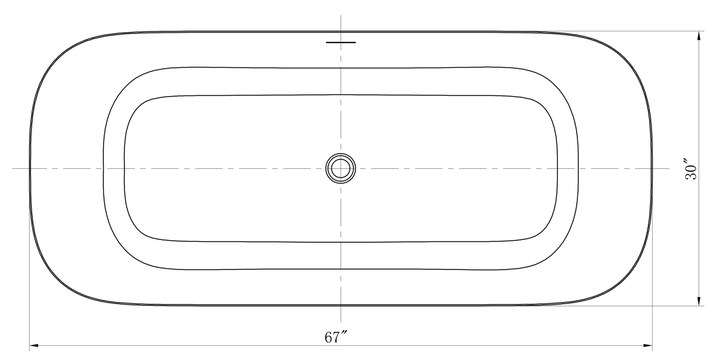

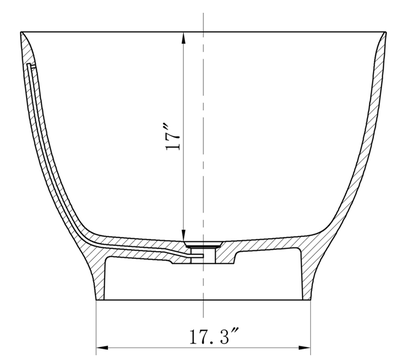

INSTALTION STEP DIAGRAM

Drain pipe is extendable and adjustable to meet your needs.

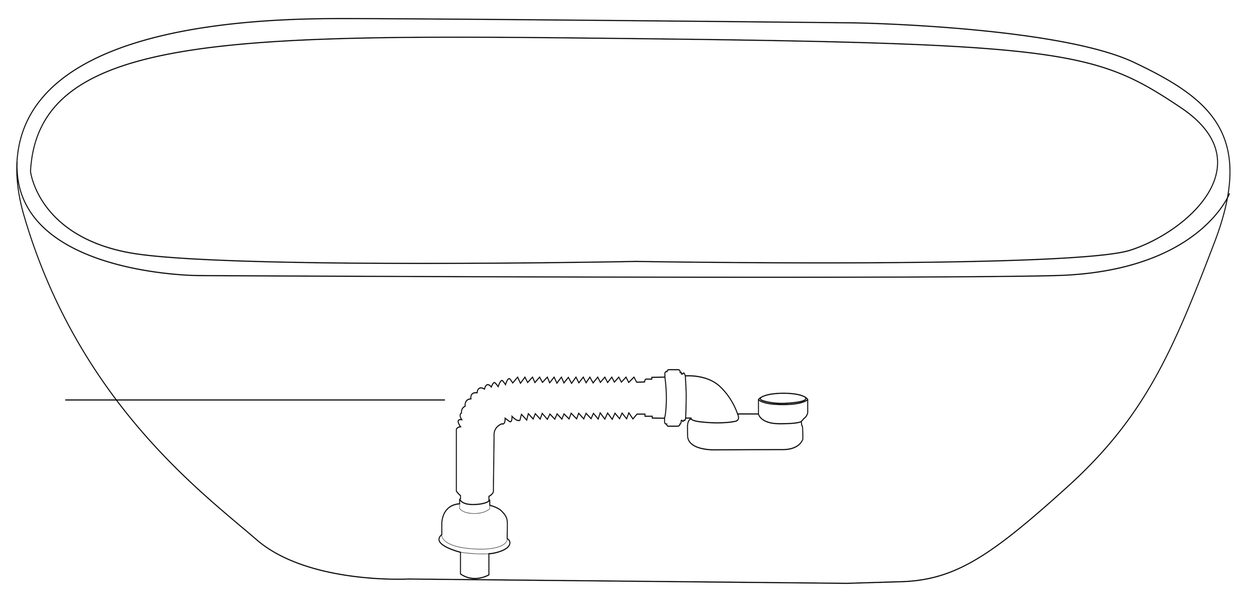

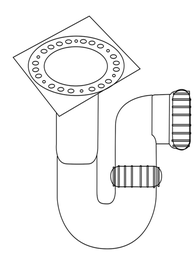

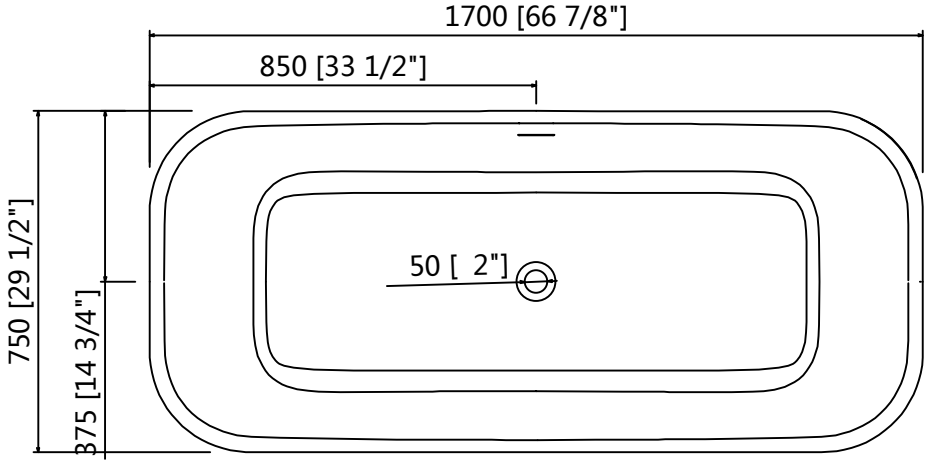
1700 [66 7/8"]
850 [33 1/2"]
750 [29 1/2"]
375 [14 3/4"]
50 [2"]

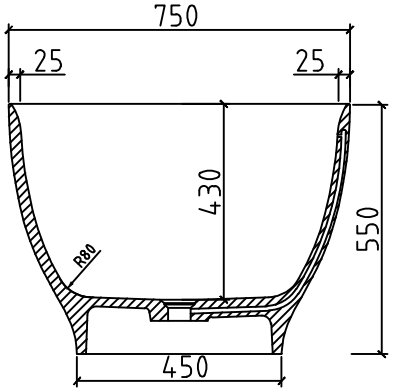
750
25
25
430
550
R80
450

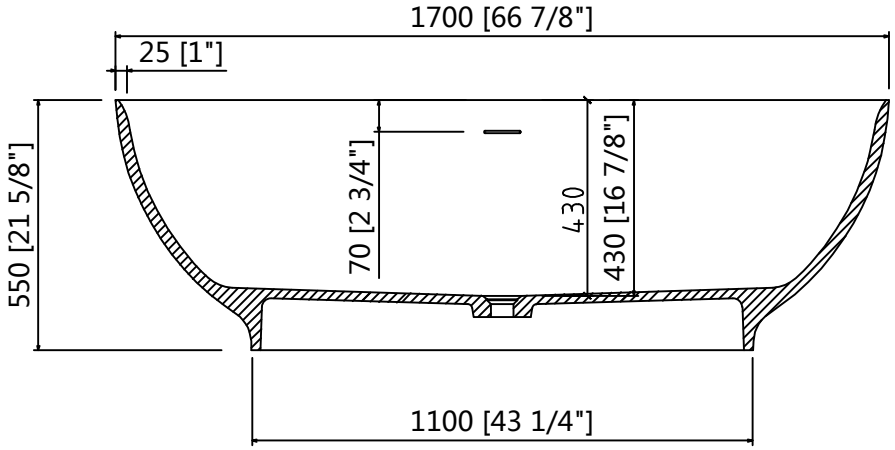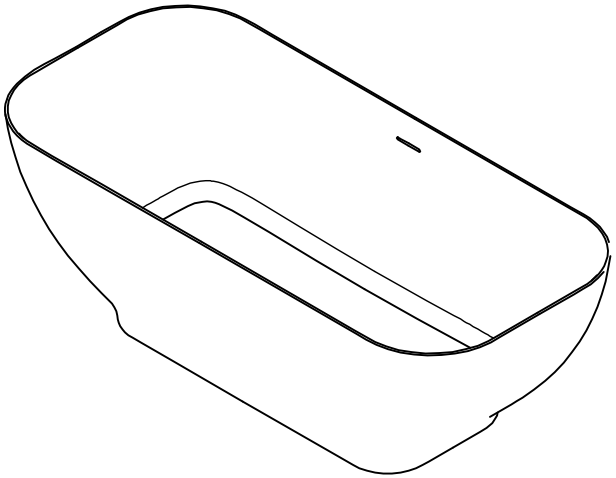
1700 [66 7/8"]
25 [1"]
550 [21 5/8"]
70 [2 3/4"]
430
430 [16 7/8"]
1100 [43 1/4"]